1864054
K-Queen Emily Bed-P1/3

Parts and Hardware List

A.	Headboard	1 pc
B.	Footboard	1 pc
C.	Side Rails	2 pcs
D.	Support Slats	3 pcs
E.	Leg Supports	4 pcs
F.	Allen Head Bolts (M8 x 25)	8 pcs
G.	Large Flat Washers	8 pcs
H.	Large Allen Head Wrench	1 pc
I.	Allen Head Bolts (M6 x 30)	6 pcs
J.	Small Flat Washers	6 pcs
K.	Nuts	6 pcs
L.	Spanner	1 pc
M.	Small Allen Head Wrench	1 pc
N.	Short Allen Head Bolts	4 pcs
O.	Finials	4 pcs

∗ Please make sure that you have all the parts and hardware indicated above before you begin assembly of this item.
∗ Use the hardware illustrations to determine correct piece and size.
∗ This item should be assembled on a soft surface to prevent scratching the finish during assembly.
∗ This item may require periodic tightening.
∗ This item is to be assembled by an adult and is not intended to be taken apart by a child.

1864054
K-Queen Emily Bed-P1/3

Hardware Illustrations

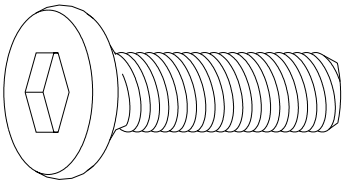

F. Allen Head Bolt (M8 X 25)

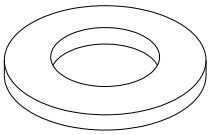

G. Large Flat Washer

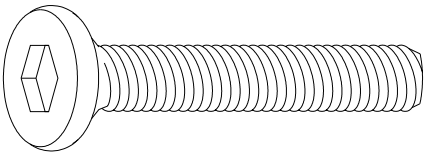

I. Allen Head Bolt (M6 X 30)

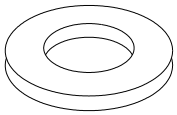

J. Small Flat Washer

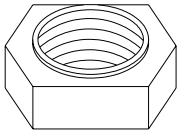

K. Nut

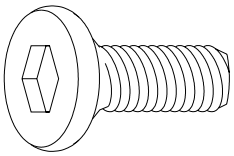

N. Short Allen Head Bolt

1864054
K-Queen Emily Bed-P1/3

Attach Side Rails to the Headboard & Footboard

Parts required

A.	Headboard	1 pc	F.	Allen Head Bolts (M8 x 25)	8 pcs
B.	Footboard	1 pc	G.	Large Flat Washers	8 pcs
C.	Side Rails	2 pcs	H.	Large Allen Head Wrench	1 pc

1. **Attach Side Rails (C)** Align the pre-drilled holes in the ends of the Side Rails (C) with the pre-threaded holes in the Headboard (A). Make sure the small square tube attached to the Side Rails (C) is facing the inside of the bed. Secure the Side Rails (C) to the Headboard (A) with the Allen Head Bolts (M8 x25) (F), Large Flat Washers (G) using the Large Allen Head Wrench (H).
2. Repeat step 1 to secure the Side Rails (C) to the Footboard (B). See Illustration #1

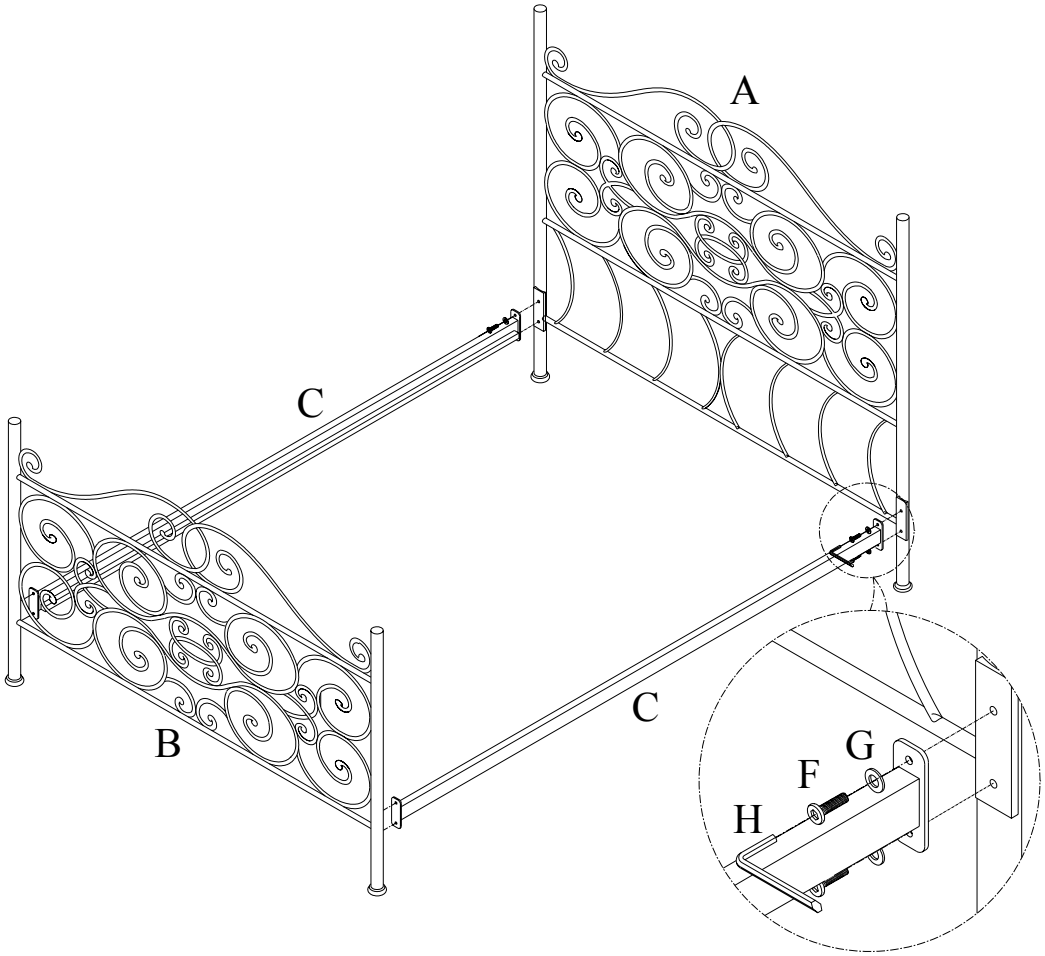

Illustration # 1

1864054
K-Queen Emily Bed-P1/3

Attach the Leg Supports & the Supports Slats

Parts required

D.	Support Slats	3 pcs	L.	Spanner	1 pc
E.	Leg Supports	4 pcs	M.	Small Allen Head Wrench	1 pc
I.	Allen Head Bolts(M6 x 30)	6 pcs	N.	Short Allen Head Bolts	4 pcs
J.	Small Flat Washers	6 pcs	O.	Finials	4 pcs
K.	Nuts	6 pcs			

3. **Attach the Leg Supports (E)** Insert the Leg Supports (E) into the short tubes on the Support Slats (D). Align the pre-threaded hole in the Leg Supports (E) with the pre-drilled hole in the short tubes. Secure in place with the Short Allen Head Bolts (N) using the Small Allen Head Wrench (M).
4. **Attach Support Slats (D)** With the square tube facing up, from underneath of the Side Rails (C), align the pre-drilled holes in the Support Slats (D) with the pre-drilled holes in the Side Rails (C). Secure in place with the Allen Head Bolts (M6 x 30) (I), Small Flat Washers (J), and Nuts (K), using the Small Allen Head Wrench (M) and the Spanner (L).
5. **Attach Finials (O).** Insert the exposed threads of Finials (O) into the pre-threaded holes in Headboard post and Footboard post. Secure by turning in a clockwise direction. See illustration #2.

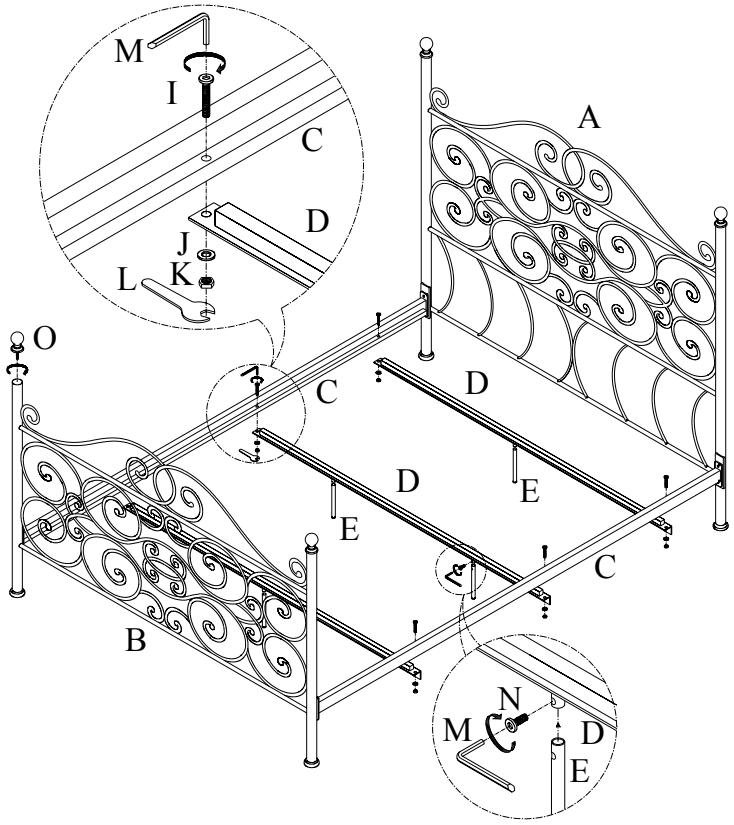

Illustration # 2